V261026

EAST GROUP CO., LTD.

TEL: +86 769 22898802 Email: eastups@eastups.com https://en.eastups.com/
No.6 Northern Industry Road, Songshan Lake Sci&Tech Industrial Park, Dongguan city, Guangdong, China(523808)



ESS Brochure HV

Portable Power Station
Hybrid Inverter
Energy Storage System
Residential Energy Storage Battery

https://en.eastups.com/
EAST GROUP CO., LTD.

Portable Power Station
EHB0510/EHB1020



500W | 1000Wh

1000W | 2000Wh

- Extra long cycle, reached 8000+, used ≥10 years
- Extra large power, use with confidence
- Lightweight & convenient, flexible arrangement
- Lithium ion phosphate battery system
- Multiple output interfaces, pure sine waves, matching multiple electrical loads

Appearance



Specification

MODEL	EHB0510	EHB1020
Output		
AC output	Pure Sine Wave	
	500W	1000W
	230Vac(50/60Hz)	
UPS transfer time	≤20ms	
USB-A(×2 output)	5V 3A(constant voltage), max. 15W/each	
USB-C(×1 output)	20W	
DC5521(×4 output)	12V±3% max. 4A	
Parallel	Na	
Others		
Display	LED	
Material	Metal	
Cooling mode	Air cooling	
Switch	Button	
IP rating	IP20	
Dimension(W×H×D)(mm)	135×245×320	210×295×315
Net weight (kg)	≈10.5	≈18.5
Battery		
Rated energy	1004.8Wh	2009.6Wh
Cell material	LFP	
Cycle life	After 8000 cycles, remaining capacity ≥70%	
Protections	High temperature, low temperature, overdischarge, overcharge, overload, short circuit, overcurrent protection	
Input		
PV voltage range	11~55V	
PV current	Max. 10A	Max. 15A
AC input power	500W	1000W
AC input voltage	220~240Vac; 50/60Hz	
Optimal ambient temperature	20~30°C	
Discharge ambient temperature	-10~60°C	
Charging ambient temperature	0~50°C	
Storage ambient temperature	-20~45°C(20~30°C suitable)	
Certification	UN38.3	

Off-Grid Inverter
EAO3K/5K1PLVG4-AA

Single phase



- Flexible setting of multiple working modes according to preferences
- Graphical LCD and keypad design, user-friendly operation interface
- Real time remote monitoring system via WiFi module, easy operation and maintenance
- High charge/discharge efficiency, compatible with lithium battery and lead-acid battery

Typical application



Parallel application

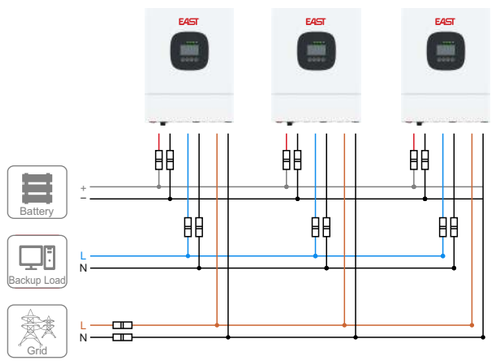

Specification

MODEL	EAO3K1PLVG4-AA	EAO5K1PLVG4-AA
Rated power	3000VA/3000W	5000VA/5000W
Parallel function	No	Yes, 6 units max
AC input		
Rated input voltage	230Vac	
Input voltage range	170~280Vac PC, 90~280Vac home application	
Rated input frequency	50/60Hz self-adapting	
Input frequency range	40~65Hz	
Rated input current	17.4A	32A
Max. input current	20A	40A
AC output		
Rated AC output voltage	230Vac	
Output settable voltage	220V/230V/240V	
Output settable frequency	50Hz/60Hz	
Rated AC output current	13.05A	21.70A
Overload capacity	60s@105%~110% Load; 10s@110%~130% Load 3s@130%~150% Load; 0.2s@>150% Load	Inverter output: 60s@105%~110% Load; 10s@110%~150% Load; 5s@≥150% Load; 300ms@≥200% Load. Power grid output: 5s@≥150% Load; 300ms@≥200% Load
THDv	<5%, linear load; <10%, non-linear load	
Efficiency(peak value)	93%	
Surge power	6000VA, 10 cycles	10000VA, 10 cycles
Switching time	10ms(Typical)	
Battery		
Battery type	Lead-acid battery/lithium battery	
Rated voltage	24Vdc	48Vdc
Charging voltage	27Vdc(default), 24~29.2Vdc settable	54Vdc(default), 48~58.4Vdc settable
Overcharge protection voltage	30.2Vdc	60.5Vdc
Rated discharge current	130A	110A
PV/AC charging		
PV charging	MPPT	
Max. PV input power	5000W	6000W
Max. PV input open circuit voltage	500Vdc	
MPPT operation range voltage	120~450Vdc	
Max. PV input current	18A	27A
Max. PV charging current	100A	
Max. AC charging current	100A	
Max. battery charging current	100A	
Others		
Dimension(W×H×D)(mm)	300×380×115	349×398.5×119
Net weight(kg)	6.6	8.8
Operating environment	-10ºC~50ºC	
IP rating	IP20	
Protections	Input over/under voltage protection, input over/under frequency protection, output overload, output short-circuit, radiator over temperature protection, fan fault detection etc.	
Communication interfaces	USB/RS485, dry contact, WiFi(optional)	

Hybrid Inverter
EAH6.6K1PLVG1-AA
Single phase



- IP65 aluminum chassis, high protection level
- Real time remote monitoring system via WiFi module, easy operation and maintenance
- Large size touch screen, user-friendly operation interface
- 0ms switching time, providing stable power supply for critical loads

Typical application

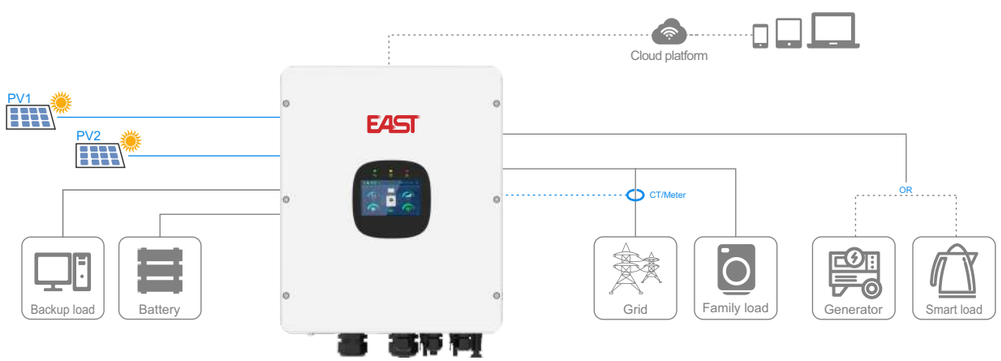

Specification

MODEL	EAH6.6K1PLVG1-AA
PV input	
Max. input power	13200W
Max. input voltage	500V
Rated input voltage	350V
Start-up voltage	60V
MPPT voltage range	60~450V
Max. input current	20A
Max. short circuit current	27A
Number of MPPT/ max. number of PV strings	2/1+1
Battery input/output	
Battery voltage range	40~60V
Max. charge/ discharge current	135A
Max. charge/ discharge power	6600W
Battery BMS communication	RS485/CAN
AC output(EPS & Smart)	
Rated output power	6600W
Max. apparent output power	6600VA
Rated output current(@220V)	30A
Rated output voltage/ frequency	L/N/PE, 220V/230V, 50Hz/60Hz
THDi	<3%@rated power
EPS switching time	<10ms
Starting surge	10s@2×rated power
THDu	<3%(linear load)
AC input(Grid & Smart)	
Max. AC charging power (grid to battery)	6600W
Max. grid input current	50A
Max. diesel generator input current	30A
Rated input voltage/ frequency	L/N/PE, 220V/230V, 50Hz/60Hz
Input frequency range	40~70Hz
Efficiency	
Max. efficiency	97.60%
European efficiency	96.50%
MPPT efficiency	>99%
General parameters	
Display	LCD touchscreen
Communications	RS485, CAN, dry contact, WiFi, Bluetooth
IP rating	IP65
Operating temperature	-25℃~60℃(>45℃ derating)
Humidity	0~100%(non-condensing)
Cooling mode	Forced air cooling
Noise level	<45dB
Dimensions(W×H×D)(mm)	370×445×174
Net weight(kg)	18

Hybrid Inverter
EAHI10-12KSL

Single phase

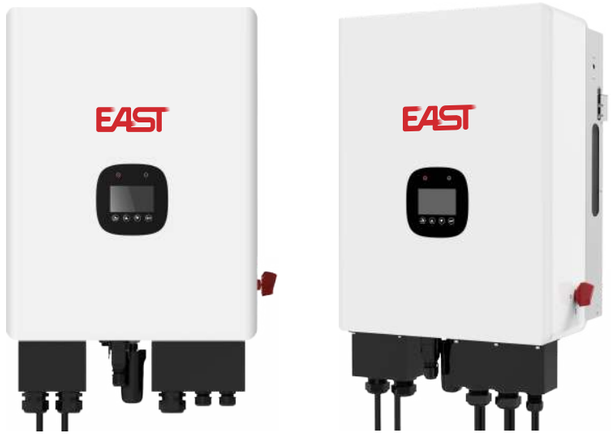

- Supports PV inverter, generators, and microgrid inputs, suitable for new and modified photovoltaic and microgrid systems
- Supports multiple inverters with EPS output in parallel, and can be expanded to small industrial and commercial applications
- Support RSD and AFCI optional configurations to provide safer protection for the system
- Mains and PV input power oversized at a ratio of 1.5, resulting in a more stable system operation

Typical application 1

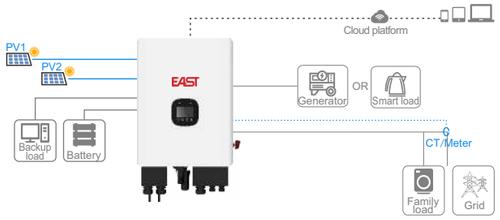

Typical application 2

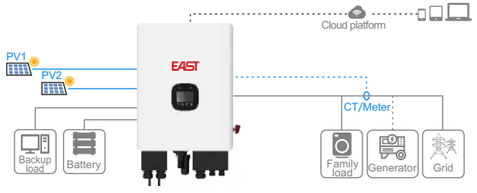

Parallel application

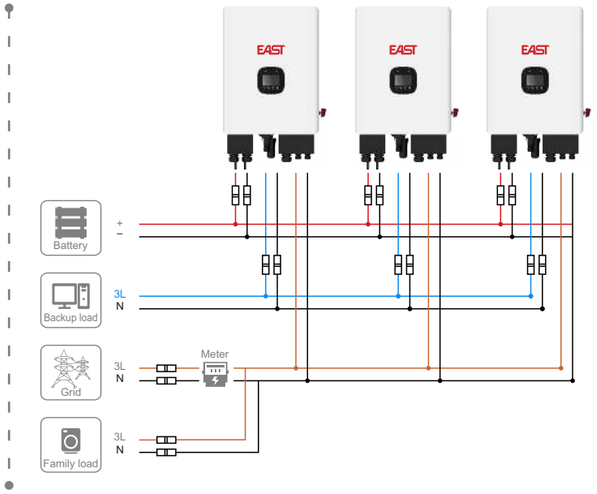

Specification

MODEL	EAHI10KSL	EAHI12KSL
PV input		
Max. input power	18000W	
Max. input voltage	550Vdc	
Start-up voltage	150Vdc	
MPPT voltage range	300V~500V	
Max. input current	30A	
Max. short circuit current	40A	
Number of MPPT/ max. number of PV strings	2/2	
Battery input/output		
Battery voltage range	42~58Vdc	
Max. charge/ discharge current	200A	250A
Max. charge/ discharge power	10000W	12000W
Battery BMS communication	CAN/485	
AC output(EPS & Smart)		
Rated output power	10000W	12000W
Max. apparent output power	10000W	12000W
Rated output current	45.5A/43.5A	54.5A/52.2A
Rated output voltage/ frequency	L/N/PE, 220/230Vac, 50Hz	
Power factor	>0.99(0.8 leading~0.8 lagging)	
THDi	<3%@rated power	
EPS switching time	≤20ms	
THDu	<3%(linear load)	
AC input(Grid & Smart)		
Max. AC charging power (grid to battery)	10000W	12000W
Max. grid input current	68.2A	81.8A
Max. diesel generator input current	45.5A	54.5A
Rated input voltage/ frequency	L/N/PE, 220/230Vac, 50Hz	
Efficiency		
Max. efficiency	97.8%	
European efficiency	96.5%	
MPPT efficiency	99.90%	
General parameters		
Display	LED/LCD	
Communications	WIFI/Bluetooth/485	
IP rating	IP66	
Operating temperature	-25℃~+60℃	
Humidity	0%~100%(No condensation)	
Cooling mode	Smart cooling	
Noise level	≤55dB	
Dimensions(W×H×D)(mm)	450x600x270	
Net weight(kg)	45	

Hybrid Inverter
ESH14K/16K1PLVG1-AA

Single phase





- 2.3 independent MPPT, 150% PV oversizing for higher yield
- <10ms UPS-level switching, AC coupling ready for system retrofit
- Max. 275A charge/discharge, compatible with genset, up to 6 units parallel
- Full aluminum IP66 enclosure, stable operation under harsh environments

Typical application

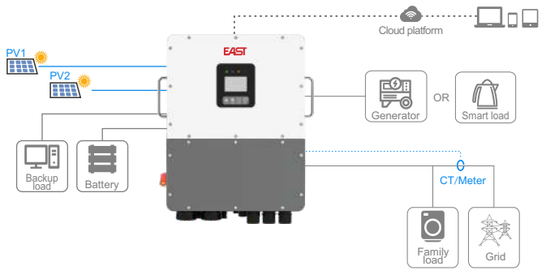

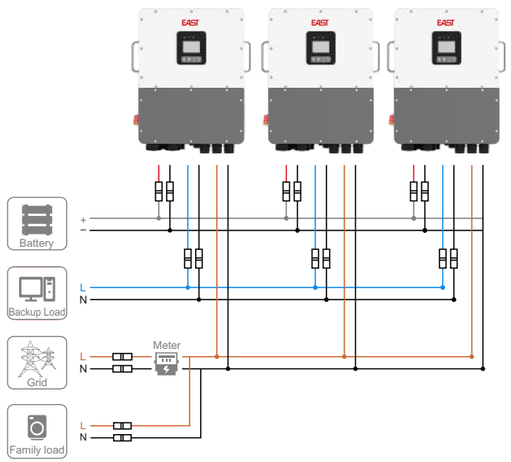

Specification

MODEL	ESH14K1PLVG1-AA	ESH16K1PLVG1-AA
PV input		
Max. input power	21000W	22500W
Max. input voltage	550V	
Start-up voltage	120V	
MPPT voltage range	120V~520V	
Max. input current	26A	
Max. short circuit current	39A	
Number of MPPT/ max. number of PV strings	3/2+2+2	
Battery input/output		
Battery voltage range	40V~60V	
Max. charge/ discharge current	275A	
Max. charge/ discharge power	14000W	16000W
Battery BMS communication	RS485/CAN	
AC output(Backup & Smart)		
Rated output power	14000W	16000W
Max. apparent output power	14000W	16000W
Rated output current	60.9A	69.6A
Rated output voltage/ frequency	L+N+PE, 220V/230V/240V, 50Hz/60Hz	
Power factor	>0.99(0.8 leading~0.8 lagging)	
THDi	<3%@rated power	
EPS switching time	<10ms	
Starting surge	10s@2×rated power/1min@1.5×rated power	
THDu	<3%(Linear load)	
AC input(Grid & Gen)		
Max. AC charging power (grid to battery)	14000W	16000W
Max. grid input current	60.9A	69.6A
Max. diesel generator input current	28000A	32000A
Rated input voltage/ frequency	L+N+PE, 220V/230V/240V, 50Hz/60Hz	
Input voltage range	184~276Vac(L-N)	
Efficiency		
Max. efficiency	97.5%	
European efficiency	97.00%	
MPPT efficiency	99.90%	
General parameters		
Display	LCD+APP	
Communications	RS485/WiFi/CAN/DRM(Optional: Bluetooth/LAN/Meter)	
IP rating	IP66	
Operating temperature	-25ºC~+60ºC(Linearly derating to 60% when exceed +45ºC~+60ºC)	
Humidity	0~95%(Non-condensing)	
Cooling mode	Intelligent Air Cooling	
Noise level	<65 dB	
Dimensions(W×H×D)(mm)	448×660×265	
Net weight(kg)	45	

Hybrid Inverter
ESH10K/15K/20K/24K3PLVG1-AA

Three phase





- Three independent MPPT channels, different current per MPPT channel, max. 245A battery charge/discharge current
- Powerful parallel capability: max. 9 units parallel connection, compatible with both on-grid and off-grid working modes
- IP66 dustproof & waterproof design, built-in AC & DC circuit breakers, optional AFCI arc fault protection
- Compatible with 40~60V lithium & lead-acid batteries, support generator connection, smart load output and AC coupling
- Support multiple operation modes with timing schedule for battery charging and discharging
- Equipped with local touch screen and cloud remote monitoring system to check real-time operation data

Typical application

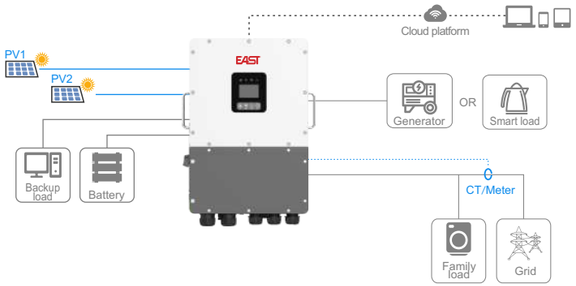

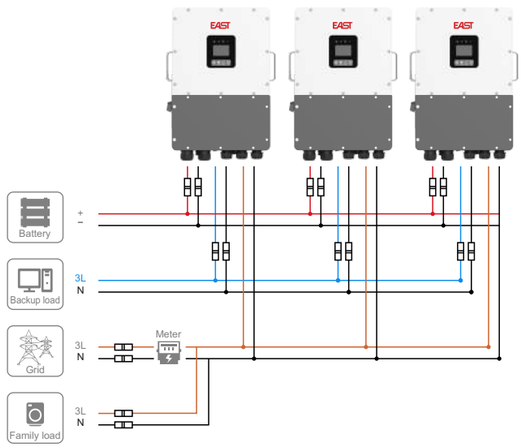

Specification

MODEL	ESH10K3PLVG1-AA	ESH15K3PLVG1-AA	ESH20K3PLVG1-AA	ESH24K3PLVG1-AA
PV input				
Max. input power	20000W	30000W	40000W	48000W
Max. input voltage	1000V			
Start-up voltage	180V			
MPPT voltage range	150V~850V			
Max. input current	20A			
Max. short circuit current	30A			
Number of MPPT/ max. number of PV strings	2/2+2			
Battery input/output				
Battery voltage range	40V~60V			
Max. charge/ discharge current	220A	315A	390A	415A
Max. charge/ discharge power	10000W	15000W	20000W	24000W
Battery BMS communication	RS485/CAN			
AC output(Backup & Smart)				
Rated output power	10000W	15000W	20000W	24000W
Max. apparent output power	10000VA	15000VA	20000VA	24000VA
Rated output current	15A	22A	29A	35A
Rated output voltage/ frequency	3L+N+PE, 380V/400V, 50Hz/60Hz			
Power factor	>0.99(0.8 leading~0.8 lagging)			
THDi	<3%@rated power			
EPS switching time	<20ms			
Starting surge	10s@2×rated power/60s@1.5×rated power/3min@1.2×rated power/6min@1.1×rated power			
THDu	<3%(Linear load)			
AC input(Grid & Gen)				
Max. AC charging power (grid to battery)	10000W	15000W	20000W	24000W
Max. grid input current	29A	43A	58A	60A
Max. diesel generator input current	16.8A	25.3A	33.7A	40.4A
Rated input voltage/ frequency	3L+N+PE, 380V/400V, 50Hz/60Hz			
Efficiency				
Max. efficiency	97.5%	98.0%		
European efficiency	97.00%	97.20%		
MPPT efficiency	99.90%			
General parameters				
Display	LCD+APP			
Communications	RS485/WiFi/CAN/DRM(Optional: Bluetooth/LAN/Meter)			
IP rating	IP66			
Operating temperature	-25ºC~+60ºC(Linearly derating to 60% when exceed +45ºC~+60ºC)			
Humidity	0~95%(Non-condensing)			
Cooling mode	Intelligent Air Cooling			
Noise level	<65 dB			
Dimensions(W×H×D)(mm)	448x660x265			
Net weight(kg)	45			

Hybrid Inverter
ESH30K/40K/50K/60K3PHVG1-EU

Three phase

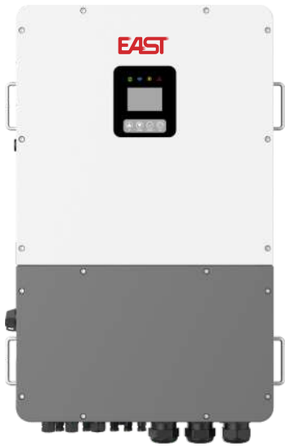



- Built-in high precision MPPT controller, wide PV voltage operating range to maximize solar energy capture efficiency
- Supports high voltage lithium battery series connection, allowing multiple battery clusters parallel expansion for flexible energy capacity configuration
- Ultra fast EPS transfer time less than 20ms, guaranteeing uninterrupted power supply for critical loads
- Multiple protection functions integrated, adapting to harsh outdoor operating environments for long-term stable operation

Typical application 1

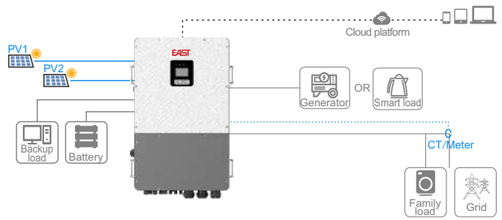

Typical application 2

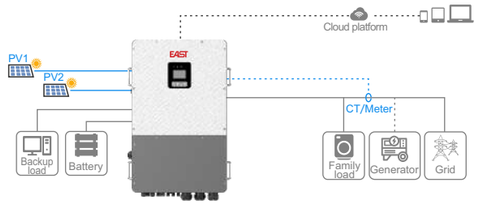

Parallel application

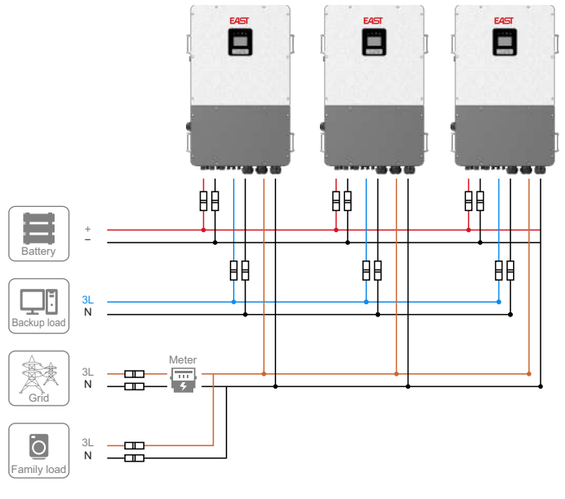

Specification

MODEL	ESH30K3PHVG1-EU	ESH40K3PHVG1-EU	ESH50K3PHVG1-EU	ESH60K3PHVG1-EU
PV input				
Max. input power	60kW	80kW	100kW	
Max. input voltage	1000V			
Start-up voltage	200V			
MPPT voltage range	150~850V			
Max. input current	20A			
Max. short circuit current	30A			
Number of MPPT/ max. number of PV strings	4/2+2+2+2			
Battery input/output				
Battery voltage range	135~850V			
Max. charge/ discharge current	100A			
Max. charge/ discharge power	30kW	40kW	50kW	60kW
Battery BMS communication	RS485			
AC output(EPS & Smart)				
Rated output power	30kW	40kW	50kW	60kW
Max. apparent output power	30kVA	40kVA	50kVA	60kVA
Rated output current	45.6/43.3A	60.8/57.7A	76/72.2A	91.2/86.6A
Rated output voltage/ frequency	380/400V, 3L+N+PE, 50/60Hz			
Power factor	0.8 leading~0.8 lagging			
THDi	<3%@rated power			
EPS switching time	<20ms			
Starting surge	30s@1.1×rated power/10s@1.2×rated power/0.2s@1.5×rated power			
THDu	<3%(Linear load)			
AC input(Grid & Smart)				
Max. AC charging power (grid to battery)	30kW	40kW	50kW	60kW
Max. grid input current	91.2A	121.6A	152A	182.4A
Max. diesel generator input current	45.6/43.3A	60.8/57.7A	76/72.2A	91.2/86.6A
Rated input voltage/ frequency	380/400V, 3L+N+PE, 50/60Hz			
Efficiency				
Max. efficiency	98.5%			
European efficiency	97.50%			
MPPT efficiency	99.90%			
General parameters				
Display	LCD			
Communications	Ethernet, RS485, 4G/WIFI			
IP rating	IP66			
Operating temperature	-25~+60℃(>45℃ linear derating to 60%)			
Humidity	<95%(non-condensing)			
Cooling mode	Air cooling			
Noise level	<65dB			
Dimensions(W×H×D)(mm)	544×880×278			
Net weight(kg)	88			

Hybrid Energy Storage System
30k-60k/100kWh-120kWh

Diesel-PV-Grid-ESS



- High protection level: cabinet IP54, Inverter IP66 protection, can be used in a variety of harsh scenarios
- Intelligent monitoring: real-time intelligent power balance control, energy management and scheduling, information monitoring and early warning, safe and reliable system
- Three-level fire-fighting strategy: Level 1 power off and shutdown protection, Level 2 perfluorohexanone gas start, Level 3 water spray fire-fighting to prevent re-ignition
- Modular design: the system consists of battery cabinet, hybrid inverter, and EMS modules, which can be flexibly configured and support dynamic expansion
- High conversion efficiency: the hybrid inverter adopts SiC technology, with the highest conversion efficiency reaching 98.5%, reducing the cost
- Application scenarios: industrial and commercial energy storage, emergency backup power supply, Diesel-PV-ESS microgrid, etc.

Typical application

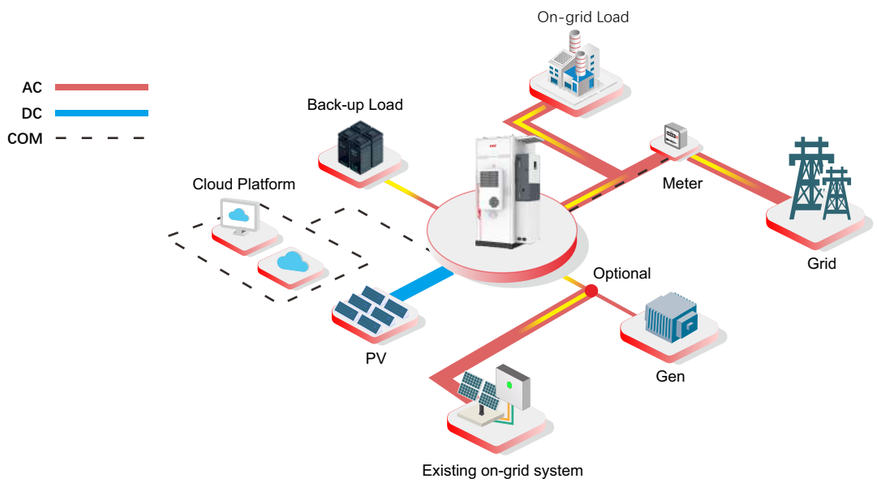

Specification

MODEL	30kW-100kWh	40kW-100kWh	50kW-100kWh	30kW-120kWh	40kW-120kWh	50kW-120kWh	60kW-120kWh
System							
Rated energy capacity	100kWh			120kWh			
Rated system power	30kW	40kW	50kW	30kW	40kW	50kW	60kW
On-grid and off-grid switching time	<20ms						
Max. conversion efficiency	98.50%						
European/MPPT efficiency	97.5%/99.9%						
IP rating	Battery cabinet(IP54), Inverter(IP66)						
Operating temperature	-25~+60℃(>45℃ linear derating to 60%)						
Relative humidity	<95%(non-condensing)						
Altitude	<4000m						
Cooling method	Air cooling						
Noise	<65dB						
Fire protection system	cabinet level gas fire-fighting(perfluorohexanone)/aerosol+water fire-fighting						
Wired/wireless communication	Ethernet, RS485, 4G/WIFI						
Human-computer interaction	LCD						
Standards	VDE V 0124-100, VDE-AR-N 4105, Tor Erzeuger Type A, OVE R25, EN 50549-1, EN 50549-2, EΛOT EN 50549-1, PAE 1165-2020, BWBR0037940 Netcode elektriciteit, NA-EEA-NE7, EIFS 2018: 2, Section 8 and 9, Type A, C10/11, MSZ EN 50549-1/-2, EN 50438 NS protection settings, CEI 0-21, UNE 217002, UNE 217001, NTS631						
Dimensions(W×H×D)(mm)	800x2100x1200						
Weight(kg)	≤1300						
Battery							
Cell	314Ah						
Configuration	1P100S			1P120S			
Rated energy	100kWh			120kWh			
Rated voltage	320Vdc			384Vdc			
Voltage range	280~365Vdc			336~438Vdc			
Inverter							
Inverter model	ESH30K3PHV G1-EU	ESH40K3PHV G1-EU	ESH50K3PHV G1-EU	ESH30K3PHV G1-EU	ESH40K3PHV G1-EU	ESH50K3PHV G1-EU	ESH60K3PHV G1-EU
PV parameters							
Max. input power	60kW	80kW	100kW	60kW	80kW	100kW	
Max. input voltage	1000Vdc						
Input voltage range	150~950Vdc						
Starting voltage	200Vdc						
Max. input current per string	8x20A						
Max. short-circuit current per string	8x30A						
MPPT voltage range	150~850Vdc						
MPPT quantity/ strings per MPPT	4/2+2+2+2						
Grid parameters							
Rated input/output power	30kW	40kW	50kW	30kW	40kW	50kW	60kW
Voltage range	380V/400V, 3L+N+PE						
Rated input current	45.6/43.3A	60.8/57.7A	76/72.2A	45.6/43.3A	60.8/57.7A	76/72.2A	91.2/86.6A
Rated output current	45.6/43.3A	60.8/57.7A	76/72.2A	45.6/43.3A	60.8/57.7A	76/72.2A	91.2/86.6A
Power factor	>0.99(0.8 leading~0.8 lagging)						
THDi	<3%@rated power						
Diesel engine parameters							
Rated power	30kW	40kW	50kW	30kW	40kW	50kW	60kW
Voltage range	320V~460V						
Rated current	45.6/43.3A	60.8/57.7A	76/72.2A	45.6/43.3A	60.8/57.7A	76/72.2A	91.2/86.6A
Backup parameters							
Rated power	30kW	40kW	50kW	30kW	40kW	50kW	60kW
Rated voltage	380V/400V, 3L+N+PE						
Rated frequency	50Hz/60Hz						
Rated current	45.6/43.3A	60.8/57.7A	76/72.2A	45.6/43.3A	60.8/57.7A	76/72.2A	91.2/86.6A

Hybrid Energy Storage System 130k/261kWh

Diesel-PV-Grid-ESS

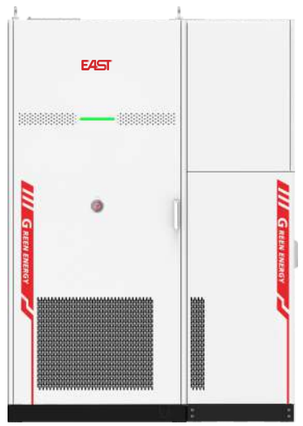

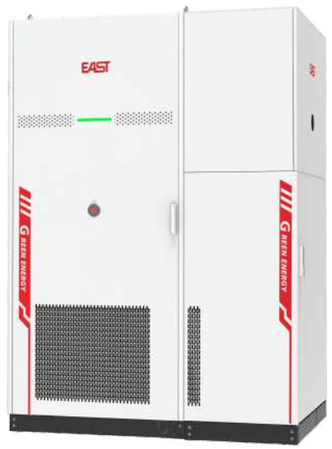

- High protection level: cabinet IP54, C4 anti-corrosion; Inverter IP66 protection, battery PACK IP67 protection, can be used in a variety of harsh scenarios
- Intelligent monitoring: real-time intelligent power balance control, energy management and scheduling, information monitoring and early warning, safe and reliable system
- High conversion efficiency: the PV-ESS inverter adopts SiC solution on a large scale, with the highest conversion efficiency reaching 98.2%, reducing the kWh cost
- Modular design: the system consists of battery cabinet, power distribution cabinet, and EMS modules, which can be flexibly configured and support dynamic expansion
- Three-level fire-fighting strategy: Level 1 power off and shutdown protection, Level 2 perfluorohexanone gas start, Level 3 water spray fire-fighting to prevent re-ignition
- Application scenarios: industrial and commercial energy storage, emergency backup power supply, Diesel-PV-ESS microgrid, etc.

System Expansion



Flexible expansion of DC side
(1 distribution cabinet + 4 battery cabinets)
130kW/261-1044kWh system



Backup side AC 4 parallel connections
130kW/261kWh*4 system

Application Scenario

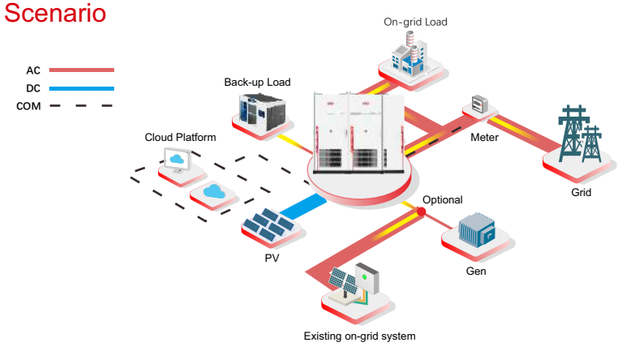

Specification

MODEL	EAPVESS130k261kWh-C
Battery parameters	
Cell	314Ah
Configuration	1P260S
Rated energy	261kWh
Rated voltage	832Vdc
Voltage range	728~949Vdc
Max. expandable quantity	4 clusters
PV parameters	
Max. input power	260kW
Max. input voltage	950Vdc
Rated input voltage	810Vdc
Starting voltage	220Vdc
Max. input/ short-circuit current	52/55A
MPPT quantity	6
Max. number of MPPT strings	3
Grid parameters	
Rated input/output power	260/130kW
Voltage range	380/400Vac(-20%~20%), 3/N/PE
Rated input current	394A/376.8A
Rated output current	197A/188.4A
Power factor	>0.99(0.8 lead~0.8 lag)
THDi	<3%@rated power
Diesel engine parameters	
Rated power	130kW
Voltage range	380/400Vac(-20%~20%), 3/N/PE
Rated current	197A/188.4A
Backup parameters	
Rated power	130kW
Rated voltage	380/400Vac, 3/N/PE
Rated frequency	50/60Hz
Rated current	197A/188.4A
THDi	<3%@linear rated power
System general parameters	
On-grid and off-grid switching time	<20ms
Max. conversion efficiency	99%
European/MPPT efficiency	98.2%/99.9%
IP rating	Battery cabinet(IP54), battery pack(IP67), power distribution cabinet(IP20), PV-ESS inverter(IP65), power distribution box(IP55)
Operating temperature	-30~60°C(>45°C derating)
Relative humidity	<95%RH(non-condensing)
Altitude	<4000m(>2000m derating)
Cooling method	Battery cabinet@Liquid cooling/PV-ESS inverter@air cooling
Noise	<65dB
Fire protection system	Cell level+cabinet level gas fire-fighting(perfluorohexanone)/aerosol+water fire-fighting
Wired/wireless communication	Ethernet(1 Modbus-TCP), RS485(1 Modbus-RTU)/4G/WIFI
Human-computer interaction	LED, APP, Web
Standards	IEC 62477-1:2012+AMD1:2016; EN 62477-1:2012+A11:2014+A1:2017+A12:2021; EN IEC 61000-6-2:2019; EN 50549-2:2019+A1:2023; EN 50549-10:2022 Type B; EN IEC 61000-6-4:2021; EN 62920:2017/A1:2021; EN 50549-2:2019 + A1:2023; EN 50549-10:2022 Type A
Dimensions(WxHxD)(mm)	1000x2250x1350@battery cabinet, 800x2250x1350@power distribution cabinet
Weight(kg)	≤2000@battery cabinet, ≤1000@power distribution cabinet

Battery Energy Storage System
EAESS135k-261/522kWh

All-in-one BESS





- Fully liquid-cooled industrial and commercial all-in-one unit, with 20% higher energy density, fully front maintenance, supports side-by-side installation, with minimal system footprint, fully modular design with integrated power distribution for simplified maintenance
- PCS module features IP66 high protection and C5 high corrosion resistance, suitable for harsh working environments, operates at up to 50°C without derating
- Dual-loop liquid cooling system for highly reliable operation, PACK and cabinet-level fire detection and suppression strategies, supporting water-based fire protection for ultimate safety
- Self-developed station-level EMS configuration, enabling high-speed control and remote intelligent settings, supports 100% three-phase unbalanced output and off-grid operation with three-phase four-wire capability

System Architecture

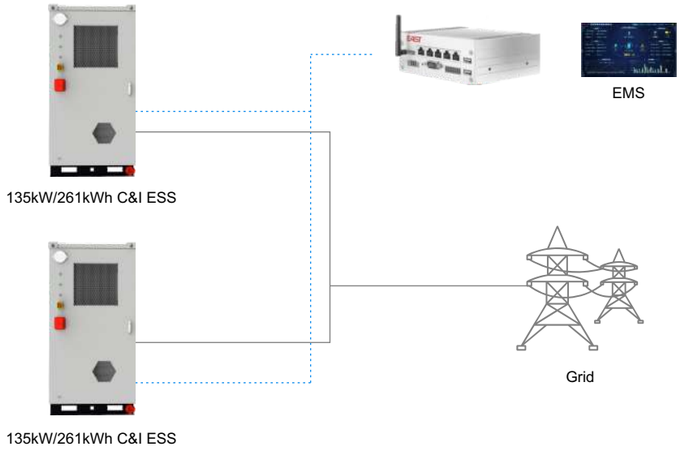

Specification

MODEL	EAESS135K-261kWh	EAESS135K-522kWh
System		
Rated energy capacity	261.248kWh	522.496kWh
Rated system power	135kW	
On-grid and off-grid switching time	≤3s	
Max. conversion efficiency	≥88%	≥89%
Cycles	≥6000@80%SOE	
DOD	5%~95%	
IP rating	Battery protection@IP67, PCS protection@IP66, system protection@IP54	
Operating temperature	-25°C~55°C	
Relative humidity	0%~95%(non-condensing)	
Altitude	≤4000m	
Cooling method	PCS liquid cooling/Battery liquid cooling	
Noise	75dB	
Fire protection system	Aerosol+active monitoring+water fire protection	
Wired/ wireless communication	LAN, IEC61850, ModbusTCP	
Human-computer interaction	Bluetooth, APP	
Certification	UN 38.3/EN 50549-1+EN 50549-2/EN 50549-10/EN 62477-1/ IEC 61000-6-2&6-4/IEC 62619+60730/IEC 63056/UL 9450A:2025	
Dimensions(W×H×D)(mm)	1000×2000×1500	1950×2000×1500
Weight(kg)	≤2350	≤4350
Battery		
Cell	3.2V/314Ah	
Configuration	1P260S	2P260S
Rated energy	261.248kWh	522.496kWh
Rated voltage	832Vdc	
Voltage range	676~949Vdc	
Grid parameters		
Rated input/output power	135kW	
Voltage range	400Vac(-20%~+15%)	
Rated input current	194.8A	
Rated output current	194.8A	
Power factor	>0.99(rated power)	
THDi	≤3%	
Backup parameters		
Rated power	135kW	
Rated voltage	400Vac	
Rated frequency	50Hz	
Rated current	194.8A	

Stacked C&I Battery
60kWh-261kWh

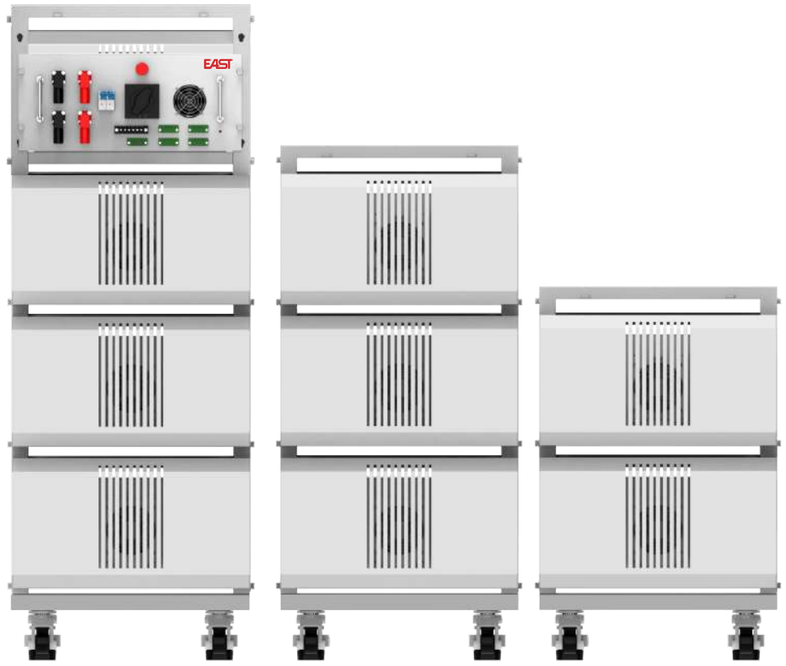

- Modular design with flexible capacity expansion up to 20kWh
- Rack-mounted installation for hassle-free unit replacement
- Intelligent management with cloud platform monitoring to reduce O&M costs
- Safe and reliable with 5-layer protection: cell, BMS, inverter, circuit breaker, and grounding
- Movable design with four self-locking swivel wheels, supporting loads up to 500kg

Specification

MODEL	EEB-R60~261-01			
Battery pack				
Model	EFP64-314			
Standard parallel unit	1P20S			
Cathode material	LiFePO4			
Rated energy	20.1kWh			
Rated voltage	64V			
Voltage range	50~73V			
Max. charge/ discharge current	157A			
Dimensions(H×W×D)(mm)	554x994x365			
Weight(kg)	145			
Control module				
Model	EBPU1500-200			
Operation voltage range	250~1000V			
Rated charge/ discharge current	200A			
Max. charge/ discharge current	250A			
Operation temperature	-25~+55°C			
AC input voltage range	85~264V			
DC input voltage range	250~1000V			
Dimensions(W×D×H)(mm)	554x1004x365			
Packaged dimensions(W×D×H)(mm)	670x1090x525			
Weight(kg)	45			
Battery system				
Model	**EEB-R60-01**	**EEB-R120-01**	**EEB-R160-01**	**EEB-R261-01**
Battery system configuration	3	6	8	13
Battery system energy	60.2kWh	120.5kWh	160.7kWh	261.2kWh
Usable energy	57kWh	114kWh	152kWh	248kWh
Operation voltage	150~219V	300~438V	400~584V	650~949V
Nominal voltage	192V	384V	512V	832V
Max charge/ discharge power	30kW	60kW	80kW	130kW
Dimensions(W×D×H)(mm)	554x1051x1527	1208x1051x1527	1862x1051x1197	2516x1051x1527
Weight(kg)	500	960	1280	2025
Rated charge/ discharge current	157A			
Operation temperature	-10~60°C			
Storage temperature	0~35°C			
DOD	95%			
System efficiency	>90%			
Operation humidity	5%~90%			
Installation	Indoor Stacking			
Altitude	≤2000m			
Cooling method	Cooling Fan			
IP rating	IP21			
Communication	CAN/485			
Cycle life	≥8000 cycles			
Certification	UN38.3/ EMC EN61000-2 EN61000-4			

51.2V Wall-mounted/ Floor-mounted Battery



- Ultra-thin wall-mounted design, saves floor space, wall installation
- Integrated design, beautiful and concise appearance, suitable for indoor home environment
- High safety, dustproof and moisture-proof, suitable for indoor household use
- Optional wheels easy to move and carry, suitable for garages and balconies

MODEL		WF5	WF10	WF16
Cathode material			LiFePO4	
Rated voltage			51.2V	
Cell capacity		100Ah	206Ah	314Ah
Rated energy		5.12kWh	10.55kWh	16.07kWh
Standard parallel unit			1P	
Output power		5kW	10kW	8kW
Charge voltage			58.4V	
Operating voltage range			41.6~58.4V	
Max. charge current		100A	100A	160A
Max. discharge current		100A	200A	200A
Operating temperature	Charge temperature		0~55°C	
	Discharge temperature		-20~55°C	
Weight(kg)		56	101	125/116
Dimension(W×D×H)(mm)		440×200×725(785 with wheels)	470×235×765(825 with wheels)	480×230×895(955 with wheels)
IP rating			IP65/IP21	
Certification			UN38.3, CE-EMC	
Cooling method			Natural cooling	
Communication			CAN/RS485	
Cycle life		≥4000 Cycles@0.5C/ 90%DOD@80%EOL, 25±2°C	≥6000 Cycles@0.5C/ 90%DOD@80%EOL, 25±2°C	≥8000 Cycles@0.5C/ 90%DOD@80%EOL, 25±2°C
Display configuration			ON/OFF button, LCD touchscreen	

51.2V 100AH Rack-mounted Battery



- Flexible Expansion: Max. 2 units(parallel connection at battery side); Max. 63 units(parallel connection at inverter busbar side)
- Integrated PACK: reduced line loss, enhanced energy density
- Comprehensive Protection: Advanced BMS with active fuse
- High compatibility, integrated design with mature and stable performance

MODEL		R5-21			
Model type		EFP48100R			
Cathode material		LiFePO4			
Rated voltage		51.2V			
Cell capacity		100Ah			
Rated energy		5.12kWh	10.24kWh	15.36kWh	20.48kWh
Standard parallel unit		1P	2P	3P	4P
Output power		5kW	10kW	10kW	10kW
Charge voltage		58.4V			
Operating voltage range		41.6~58.4V			
Max. charge current		50A	100A	150A	200A
Max. discharge current		100A	200A	200A	200A
Operating temperature	Charge temperature	0~55°C			
	Discharge temperature	-20~55°C			
Weight(kg)		46	92	138	184
Dimension(W×D×H)(mm)		483×450×153	483×450×306	483×450×459	483×450×612
IP rating		IP21			
Certification		UN38.3, CE-EMC			
Cooling method		Natural cooling			
Communication		CAN/RS485, Bluetooth+APP			
Cycle life		≥6000 Cycles@0.5C/90%DOD@70%EOL, 25±2°C			
Display configuration		ON/OFF button, SOC indicator light(button LCD optional)			

51.2V 100AH Stacked Battery



- Modular independent battery packs, support free vertical stacking expansion
- Uniform single-pack capacity, flexible capacity adjustment, easy to upgrade later
- Built-in independent BMS, automatic parallel communication between packs, no extra controller required
- Single pack fault can be replaced separately without affecting overall operation, easy maintenance

MODEL	S5-54			
Model type	EFP48100R			
Cathode material	LiFePO4			
Rated voltage	51.2V			
Cell capacity	100Ah			
Rated energy	5.12kWh	10.24kWh	15.36kWh	20.48kWh
Standard parallel unit	1P	2P	3P	4P
Output power	5kW	10kW	10kW	10kW
Charge voltage	58.4V			
Operating voltage range	41.6~58.4V			
Max. charge current	50A	100A	150A	200A
Max. discharge current	100A	200A	200A	200A
Operating temperature Charge temperature	0~55°C			
Operating temperature Discharge temperature	-20~55°C			
Weight(kg)	11+50×1	11+50×2	11+50×3	11+50×4
Dimension(W×D×H)(mm)	580×390×380	580×390×560	580×390×740	580×390×920
IP rating	IP54			
Certification	UN38.3, CE-EMC			
Cooling method	Natural cooling			
Communication	CAN/RS485, Bluetooth+APP			
Cycle life	≥6000 Cycles@0.5C/90%DOD@70%EOL, 25±2°C			
Display configuration	Quick-connect terminal, ON/OFF button, SOC indicator light			

CORE BUSINESS

Power Supply
UPS/EPS power supply, rail transit power supply, special power supply

Smart Energy
Solar inverter, EV charging piles, power generation system, sodium-ion/lithium-ion battery

Digital Industry & Smart Energy Integrated Solutions Provider

Data Center
Cloud computing data center, IT infrastructure, precision air conditioner

Energy Storage
Energy storage system, PCS, EMS, BMS, micro-grid network and smart distribution network

Digital technology helps all walks of life with smart upgrade!

STRONG RESEARCH & DEVELOPMENT TEAM

2000+ Employees
600+ R&D Engineers
800+ Patents
70+ Core Technology




